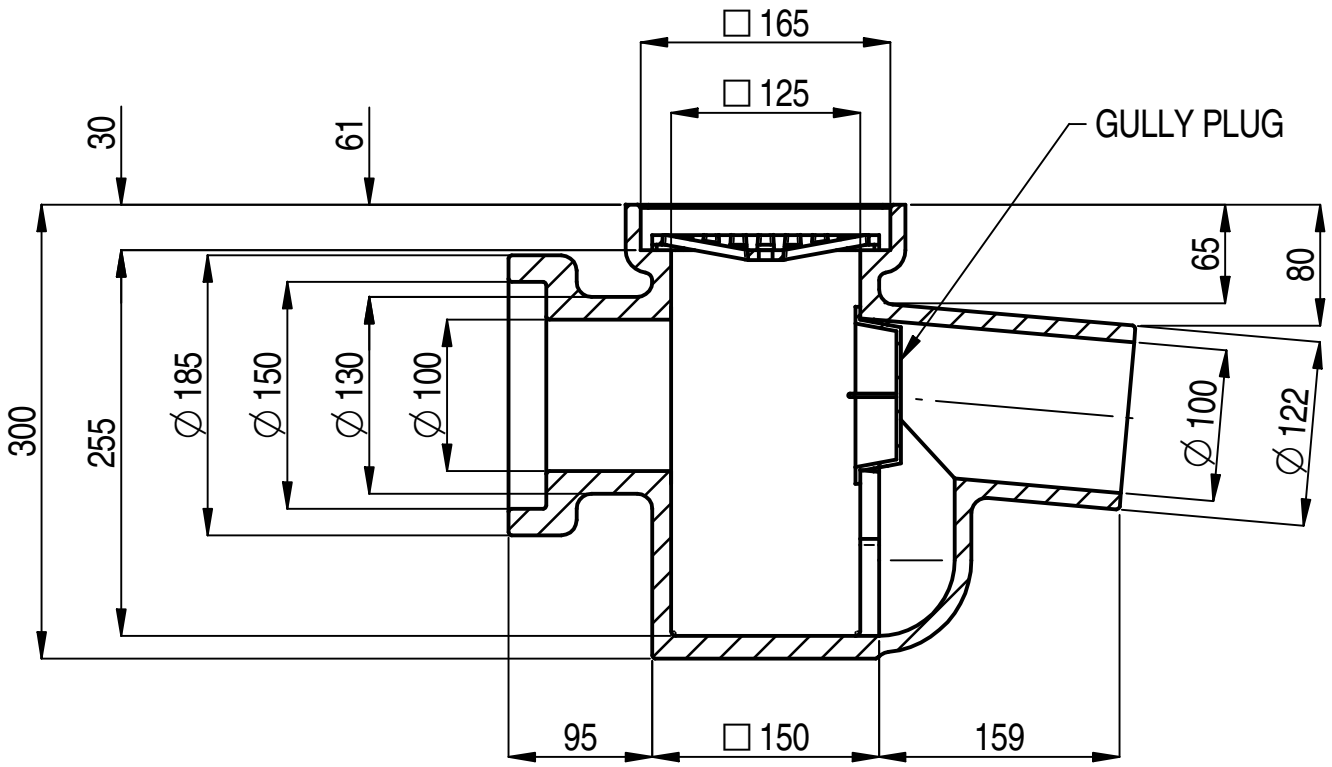

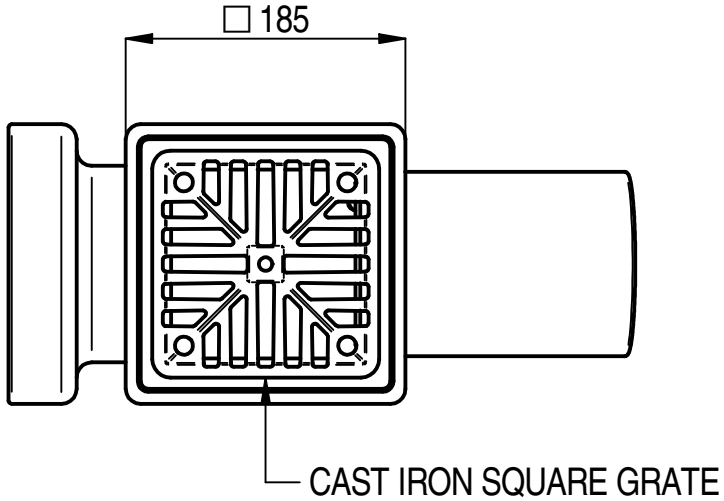

ISOMETRIC VIEW
1:10

COMPLETE WITH CAST IRON SQUARE GRATE 150 x 150 (6" x 6") CODE KIG2C

ALL DIMENSIONS IN mm

	THIS DRAWING IS THE PROPERTY OF WT KNOWLES & SONS LTD AND MUST NOT BE USED IN ANY WAY PREJUDICIAL TO THEIR INTERESTS				TITLE :- SQUARE INSPECTION GULLY WITH SOCKETTED BACK INLET
	WEIGHT = 10.80 Kg	DRAWN: GB 17-09-10	SCALE	PROJECTION	DRAWING No. :- KRGU4/1S
	DO NOT SCALE	ISSUE: 1 17-09-10	1:5		A4